Notre Dame Physics Department Qualifying Examination

SAMPLE **(not for distribution)**

Part I

Each problem will be graded on a scale of 0-4 points. You are asked to do any 8 of the problems.

Clearly indicate your choices, by listing here the two problems that you are not going to attempt:
a) _____ b) _____.

Use only **PEN** for this test. Show all your work on separate pages for each problem. Please use only one side of the paper to work the problems!
Collect your work together in numerical order (number each page) by problem when you finish, including your equation sheet at the end, use the envelope provided to store your work and the exam. Good luck!

Please confirm your student ID number: **Master.**

DO NOT WRITE YOUR NAME!

1. The two blocks m and M shown in the figure are free to move. The coefficient of static friction between the blocks is μ_s, but the surface beneath M is frictionless. What is the minimum horizontal force F required to hold m against M?

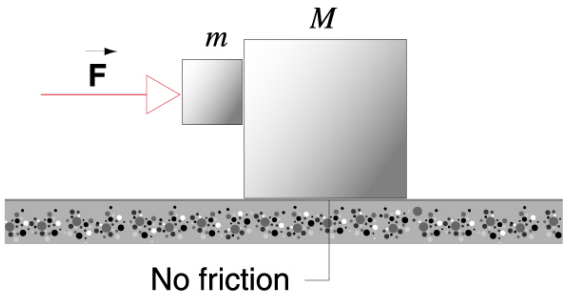

-

2. A uniform flexible chain of length L, with weight per unit length λ, passes over a small, frictionless peg. It is released from a rest position with a length of chain x hanging from one side and a length $L - x$ from the other side. Find the acceleration a as a function of x.

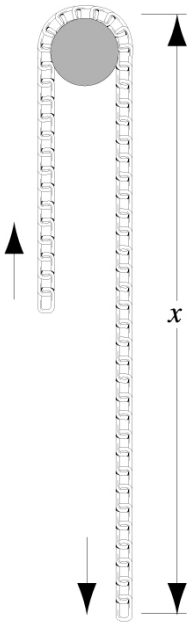

3. A solid cylinder of length L and radius R has a weight W. Two cords are wrapped around the cylinder, one near each end, and the cord ends are attached to hooks on the ceiling. The cylinder is held horizontally with the two cords exactly vertical and is then released. Find (*a*) the tension in each cord as they unwind and (*b*) the linear acceleration of the cylinder as it falls.

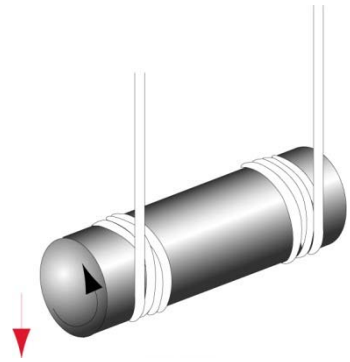

4. A uniform flat disk of mass M and radius R rotates about a horizontal axis through its center with angular speed ω_0. (*a*) What is its angular momentum? (*b*) A chip of mass m breaks off the edge of the disk at an instant such that the chip rises vertically above the point at which it broke off. How high above the point does it rise before starting to fall? (*c*) What is the final angular speed of the broken disk?

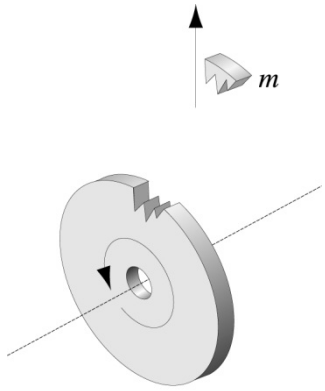

5. A boy is seated on the top of a hemispherical mound of ice. He is given a very small push and starts sliding down the ice. What height above the ground does he leave the ice if the ice is frictionless? (Hint: The normal force vanishes as he leaves the ice.)

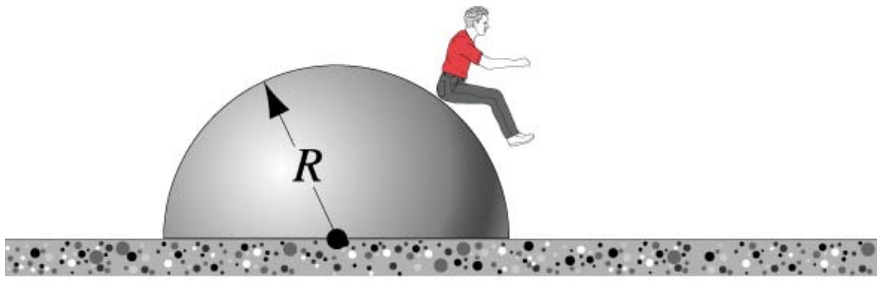

6. A satellite travels initially in an approximately circular orbit 640 km above the surface of the Earth; its mass is 220 kg. (*a*) Determine its speed. (*b*) Determine its period of revolution. (*c*) For various reasons the satellite loses mechanical energy at the (average) rate of 1.40 X 10^5 J per orbital revolution. Adopting the reasonable approximation that the trajectory is a "circle of slowly diminishing radius," determine the distance from the surface of the Earth, the speed, and the period of the satellite at the end of its 1500th orbital revolution. (*d*) What is the magnitude of the average retarding force? (*e*) Is angular momentum conserved?

7. Consider the "Venturi meter" the figure with water flowing through a tube of varying radius. Let $A_1 = 4.75A_2$, where A_1 and A_2 are the cross-sectional areas of the flow tube. Suppose that the pressure at point 1 is 2.12 atm. (*a*) Compute the values of v_1 at point 1 and v_2 at point 2 that would make the pressure p_2 at point 2 equal to zero. (*b*) Compute the corresponding volume flow rate if the diameter at point 1 is 5.20 cm. The phenomenon at point 2 when p_2 falls to nearly zero is known as *cavitation*. The water vaporizes into small bubbles.

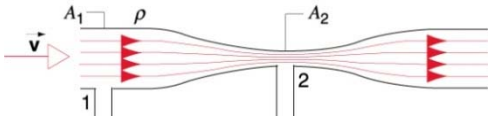

8. Consider an unusual galaxy, in which the stars are uniformly distributed around a ring of radius *R* and total mass *M*, except for one star (mass *m*) that resides at the center of the ring. (*a*) Suppose the central star is displaced a distance z from the plane of the ring along its symmetry axis. Find an expression for the gravitational force on the star due to the ring. (*b*) Assuming $z \ll R$, find the oscillation frequency *f* if the central star is displaced a distance z along the axis and then released. (*c*) Estimate the oscillation frequency for a galaxy of mass and radius equal to that of the Milky Way. Assume the radius and mass of the galasy are 100 light years and 10^{12} kg, respectively.

9. A particle of rest mass *m* traveling at a relativistic speed makes a completely inelastic collision with an identical particle that is initially at rest. Find (*a*) the speed of the resulting single particle and (*b*) its mass. Express your answers in terms of the Lorentz factor γ of the incident particle.

10. The envelope and basket of a hot-air balloon have a combined mass of 249 kg, and the envelope has a capacity of 2180 m^3. When fully inflated, what should be the temperature of the enclosed air to give the balloon a lifting capacity of 272 kg (in addition to its own mass)? Assume that the surrounding air, at 18.0˚C, has a density of 1.22 kg/m^3.